# PRODUCT CATALOG

shark SEATING



# About Shark

**9 kg approximate weight | 225 mm active travel | 10G impact testing | 1,000,000 cycles**

## Engineering a Safer Ride

Shark Seating's patented suspension architecture combines proprietary FLEXANITE® composite leaf springs with a purpose-built marine-grade stainless steel shock absorber. The integrated system delivers lightweight, multi-axis shock mitigation without the heavy structures, complex linkages, or manual tuning associated with conventional metal suspensions.

## Core Technical Advantages

**FLEXANITE® Composite Architecture**

Precision-molded composite springs deflect across vertical, lateral, and fore-and-aft axes, reducing the transfer of complex vessel motion to the occupant. FLEXANITE® is lightweight, UV- and corrosion-resistant, requires no painted exterior coating, and maintains a low radar footprint.

**225 mm of Travel**

FLEX provides 225 mm (9 in) of vertical travel, creating an extended deceleration path that reduces peak acceleration and preserves available stroke during repeated high-energy impacts. FLEX-equipped seating has completed one million 10G impact cycles at 200 mm travel, 100 millisecond duration, and a 100 kg payload.

**Lightweight, Self-Adjusting Control**

At approximately 9 kg (19.8 lb), FLEX reduces installed weight while preserving vessel payload. Its integrated shock absorber automatically responds under load without manual tuning, air-pressure adjustment, or routine re-gassing.

**Safety and Platform Integration**

The smooth composite structure removes exposed pinch points, sharp edges, and complex metal linkages. FLEX integrates with Shark seating and compatible third-party seat platforms, supporting varied vessel layouts and operational requirements.

**Low-Maintenance Construction**

Corrosion-resistant materials and minimal moving components reduce wear, service requirements, and operational downtime. Routine care consists of a fresh-water rinse following saltwater exposure and periodic inspection in accordance with Shark's maintenance guidance.

**Comprehensive Warranty Coverage**

**5-Year Hardware Protection:**
Covers all Shark suspension modules, pedestals, and structural frames against defects in materials and workmanship under normal use.
**1-Year Soft Goods Protection:** Covers all original upholstery, foams, cushions, and covers.
**Commercial/Gov Fleets:** 1-year comprehensive warranty across all items (or as specified by written agreement).
**Support:** For service and RMA requests, contact: sharkwarranty@springfieldgrp.com



# INDEX


## New Products Pg. 4 - 5

- FP4
- 6G Shock Mitigating Leaning Stand

## Suspension Units Pg. 6 - 9

- FLEX
- FLEX-HD
- FLEXpod
- FLEXpod-HD

## Suspension Seats Pg. 10 - 15

- LUXE
- EPIC
- ULTRA
- ULTRAlite
- EVO
- EVOlite

## Plinths and Accessories Pg. 16 - 19

- A1 Plinth
- A2 Plinth
- A3 Plinth
- FIX Plinth
- TRAX
- Lap Belt and Brace Kit
- Side Handles
- Adjustable Armrests
- Foot Pegs
- Fold-Away Footrest
- 4-Point Harness
- Fore-handle
- Swivel

## Covers Pg. 20 - 21

- Gray Cover with Logo
- Gray Cover without Logo
- Black Cover with Logo
- Black Cover without Logo
- Stowage Cover

## Testimonials and FAQ's Pg. 22 - 23

# Introducing *FP4*

PXEXAB00

## Designed for serious anglers

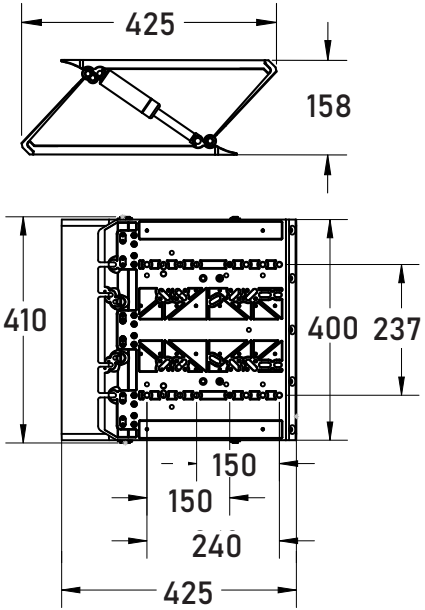




## SPECIFICATIONS

**Travel:** 101.6 mm / 4"

**Weight:** 4.6 kg / 10 lbs

**Impact protection:** 6G

Engineered for demanding, high-speed marine conditions, ***FP4*** integrates shock mitigation performance into a compact, low-profile platform built for wider seating configurations. Designed for offshore fishing and recreational vessel applications, it reduces impact transmission to the occupant, supporting greater control, reduced fatigue, and sustained performance throughout extended periods on the water.

# Shock Mitigating Leaning Stand

PHEXAA01

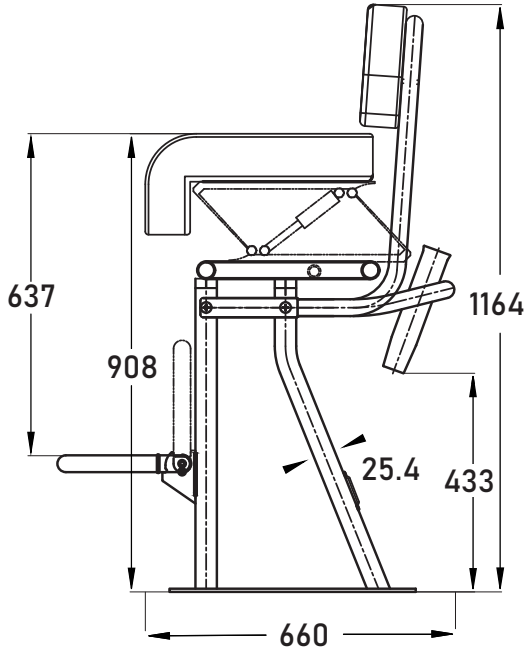





## SPECIFICATIONS

**Travel:** 101.6 mm / 4"

**Weight:** 34.9 kg / 77 lbs

**Impact protection:** 6G

This design is the industry's first **shock-mitigating leaning stand**, featuring dual Shark FP4 suspensions with 4.5" travel and up to 6G impact mitigation for two users. Built for tough marine conditions, it blends advanced shock absorption with durability and practicality. Made from 1" aluminium tubing, it includes four rod holders, a fold-down footrest, and a cooler strap for comfort and space. Dual-occupant shock mitigation. Built for rough water. Designed to perform.

# FLEX

FXAXAA00

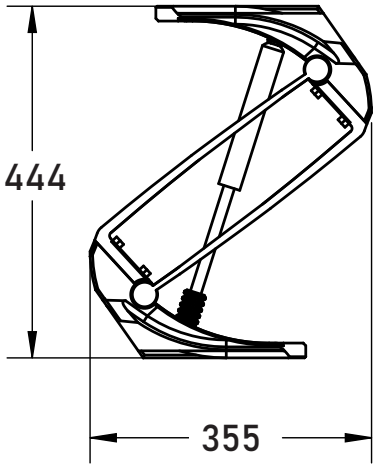


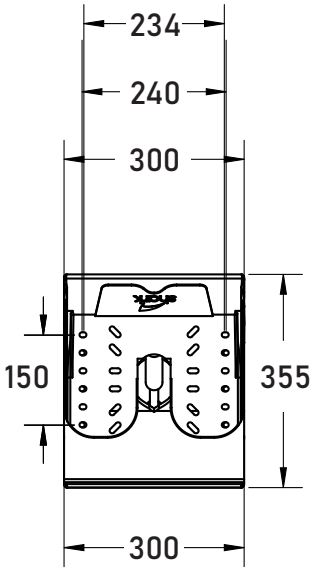





*This suspension pairs best with A1 and FIX plinths. See Page 12.

## SPECIFICATIONS

**Travel:** 225 mm / 9"

**Weight:** 9 kg / 19.8 lbs

**Impact protection:** 10G

***FLEX*** pioneered Shark's approach to marine shock mitigation and remains the foundation of its suspension technology. Engineered for patrol, intercept, rescue, and demanding offshore operations, FLEX provides 225 mm (9 in) of travel and multi-axis mitigation of vertical, lateral, and fore-and-aft forces. Its lightweight, corrosion-resistant architecture supports control, endurance, and operational readiness across a wide range of helm and crew configurations.

# FLEX-HD

FXDXAA00

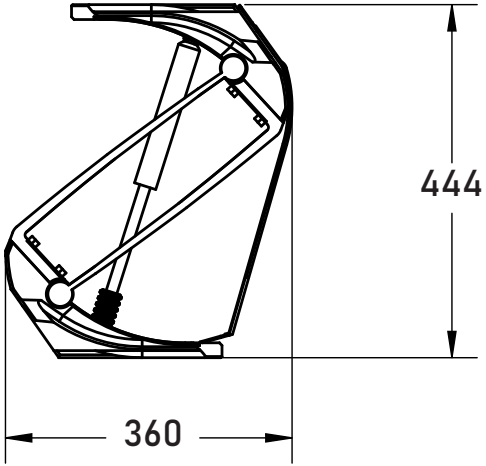


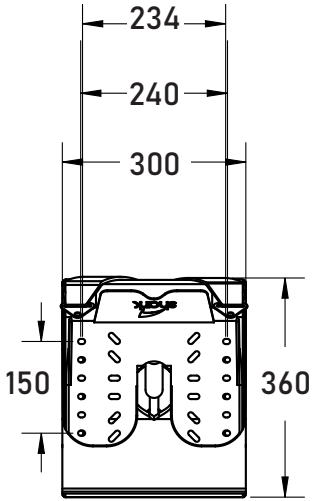





*This suspension pairs best with A1 and FIX plinths. See Page 12.

## SPECIFICATIONS

**Travel:** 225 mm / 9"

**Weight:** 10 kg / 22 lbs

**Impact protection:** 10G

***FLEX-HD*** extends the proven FLEX platform to applications requiring increased structural capacity. Integrated restraint straps add reinforced crash protection while retaining 225 mm (9 in) of multi-axis travel. Built for heavily equipped operators, specialized seating configurations, and demanding patrol, rescue, commercial, and defense vessels, FLEX-HD delivers additional structural support without abandoning the lightweight composite architecture of FLEX.

# *FLEX*pod

PXEXAA00

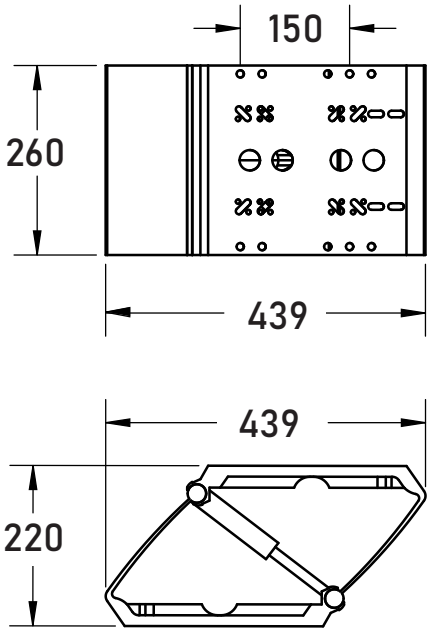




*This suspension pairs best with A2 and A3 plinths. See Page 12.

## SPECIFICATIONS

**Travel:** 150 mm / 6"

**Weight:** 3.3 kg / 7.3 lbs

**Impact protection:** 6G

***FLEX**pod* concentrates Shark's multi-axis suspension technology into an ultra-compact 3.3 kg (7.3 lbs) platform. With 150 mm (6 in) of travel, it mitigates vertical, lateral, and fore-and-aft forces while preserving critical deck space and vessel payload. Engineered for integration with Shark's compact jockey seating, FLEXpod delivers controlled shock-mitigation performance for weight-sensitive vessels, low-clearance installations, and confined helm and crew positions.

# *FLEX*pod-HD

PXFXAA00

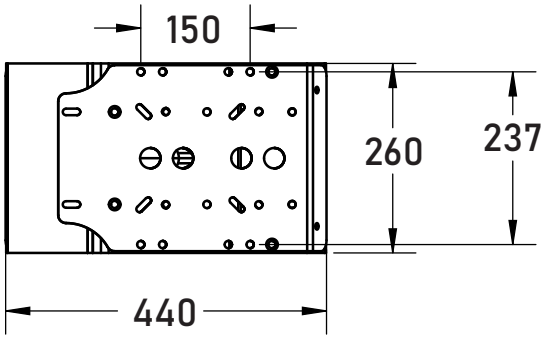


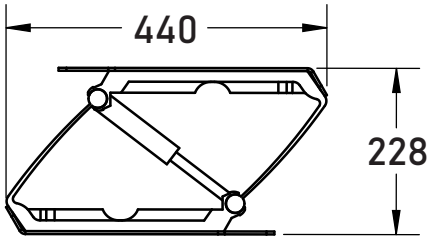




*This suspension pairs best with A2 and A3 plinths. See Page 12.

## SPECIFICATIONS

**Travel:** 150 mm / 6"

**Weight:** 4.3 kg / 9.5 lbs

**Impact protection:** 6G

***FLEX**pod-**HD*** takes architecture of FLEXpod and allows wider seating configurations and compatible third-party seats. Dual marine-grade alloy reinforcement plates increase platform stiffness and distribute seat loads across the suspension while retaining 150 mm (6 in) of travel, multi-axis response, and a compact footprint. Built for specialized helm and crew configurations, FLEXpod-HD provides reinforced seat integration where space and weight remain critical.

# LUXE

FEAX1110

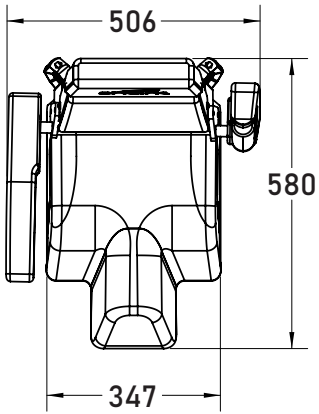


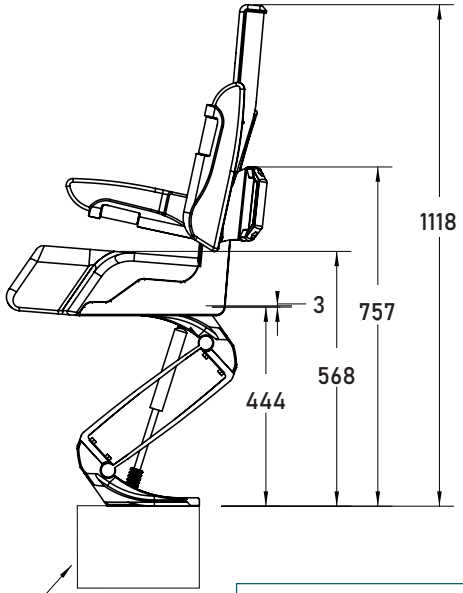


3 RECOMMENDED PLINTHS
SIZED FROM 120 MM
TO 430 MM TALL

This A1 plinth is a recommended accessory to achieve the correct height and posture for taking impacts. See Page 12.



## SPECIFICATIONS

**Travel:** 225 mm / 9"

**Weight:** 16.1 kg / 35.5 lbs

**Impact protection:** 10G

***LUXE is Shark's premier shock-mitigation seating system, combining full occupant support with proven FLEX suspension performance. Its fully upholstered jockey seat features an elevated backrest and angle-adjustable, folding armrests secured by a rigid rear brace with integrated rear grab handles. Delivering 225 mm (9 in) of travel, the system mitigates multi-axis forces to preserve control, posture, and endurance in demanding conditions. Available in black or grey.***

# EPIC

FEAX1000

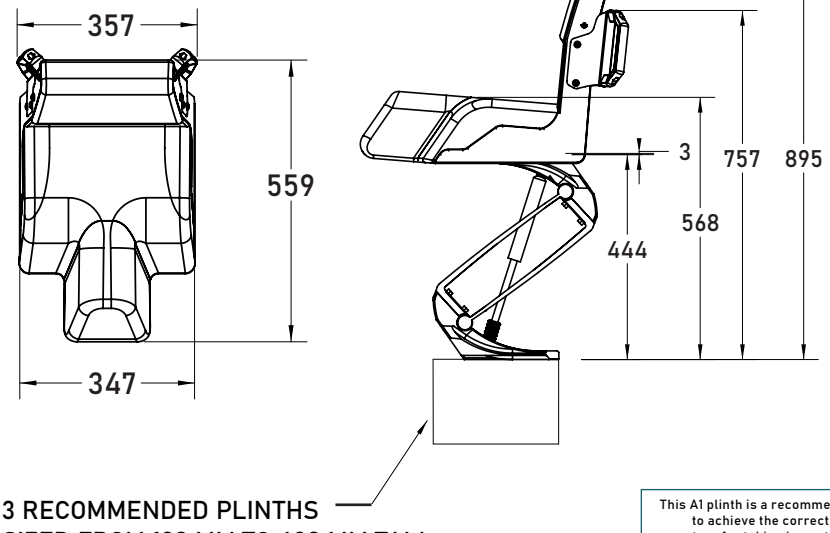


3 RECOMMENDED PLINTHS
SIZED FROM 120 MM TO 430 MM TALL

This A1 plinth is a recommended accessory to achieve the correct height and posture for taking impacts. See Page 12.



## SPECIFICATIONS

**Travel:** 225 mm / 9"

**Weight:** 14.1 kg / 31.1 lbs

**Impact protection:** 10G

***EPIC*** pairs a purpose-engineered jockey seat with Shark's FLEX suspension platform for demanding marine operations. Its straddle geometry optimizes posture and control, while 225 mm (9 in) of travel mitigates multi-axis forces to support control and endurance in demanding conditions. Featuring marine-grade upholstery, energy absorbing foam, and an integrated rear handhold, it delivers durable, sustained offshore performance. Available in black or gray.

# ULTRA

FBAX2000

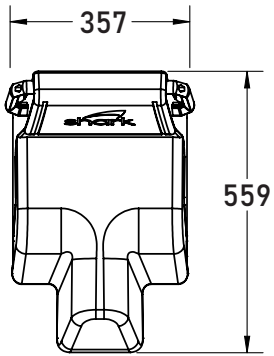


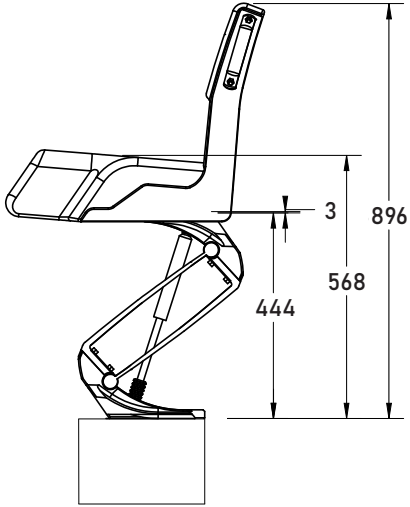




This A1 plinth is a recommended accessory to achieve the correct height and posture for taking impacts. See Page 12.

## SPECIFICATIONS

**Travel:** 225 mm / 9"

**Weight:** 13.1 kg / 28.8 lbs

**Impact protection:** 10G

***ULTRA*** integrates a rugged, injection-molded jockey seat with Shark's proven FLEX suspension. Its compact straddle geometry and energy-absorbing foam support occupant positioning and control, while 225 mm (9 in) of multi-axis travel absorbs vertical, lateral, and fore-and-aft forces. Engineered for demanding helm and crew applications, ULTRA delivers full shock-mitigation performance within a focused, durable seating system.

PBEX2000

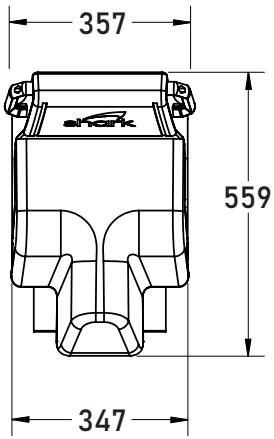


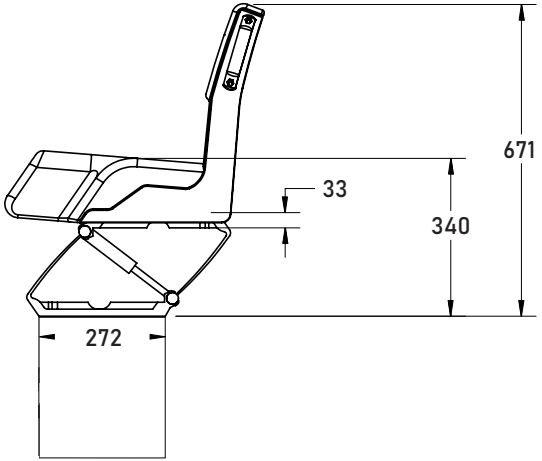




This A3 plinth is a recommended accessory to achieve the correct height and posture for taking impacts. See Page 12.

## SPECIFICATIONS

**Travel:** 150 mm / 6"

**Weight:** 7.1 kg / 15.7 lbs

**Impact protection:** 6G

***ULTRA**lite* pairs the same ULTRA jockey seat with Shark's ultra-compact FLEXpod suspension. Weighing approximately 7.1 kg (15.7 lbs), the complete system provides 150 mm (6 in) of travel and multi-axis response within a substantially reduced height, weight, and installation footprint. Engineered for confined decks, low-clearance installations, and weight-sensitive vessels, ULTRAlite preserves critical space and payload while delivering controlled shock mitigation.

# EVO

FGAX0002

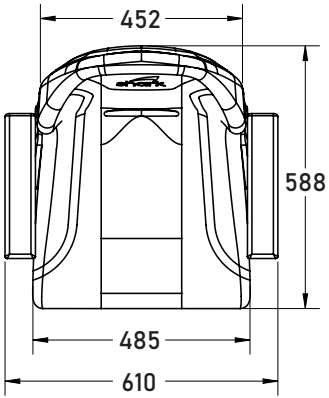


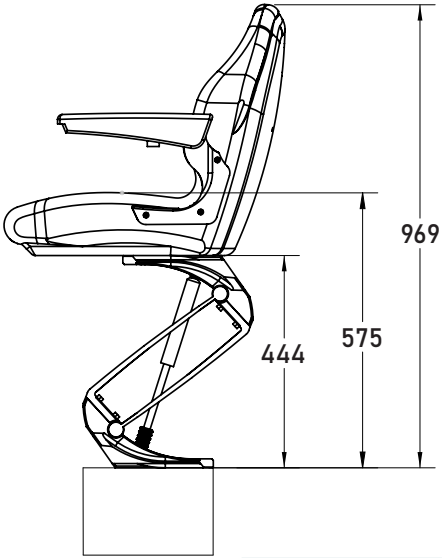


This A1 plinth is a recommended accessory to achieve the correct height and posture for taking impacts. See Page 12.




## SPECIFICATIONS

**Travel:** 225 mm / 9"

**Weight:** 18.5 kg / 40.8 lbs

**Impact protection:** 10G

EVO integrates an ergonomically contoured helm seat featuring adjustable, folding armrests with Shark's proven FLEX suspension. Delivering 225 mm (9 in) of travel and multi-axis mitigation of vertical, lateral, and fore-and-aft forces, the system reduces impact transmission while supporting operator positioning, control, and endurance. Its adaptable, marine-grade construction makes EVO a capable seating solution for demanding offshore applications.

PGEX0002

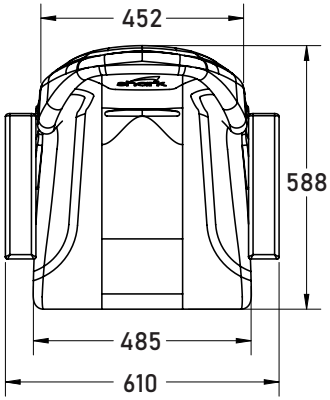


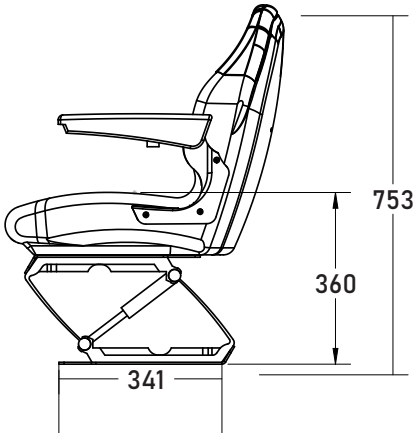





This A3 plinth is a recommended accessory to achieve the correct height and posture for taking impacts. See Page 12.

## SPECIFICATIONS

**Travel:** 150 mm / 6"

**Weight:** 8 kg / 17.6 lbs

**Impact protection:** 6G

***EVOlite pairs the ergonomic EVO seat—featuring angle-adjustable, folding armrests—with Shark's FLEXpod-HD suspension. Delivering multi-axis shock mitigation in a compact platform, dual alloy plates reinforce the wider seat while 150 mm (6 in) of travel reduces impact forces. Engineered where deck space, height, and weight are critical, it provides helm protection without a full-size suspension footprint.***

# Plinths




A-Series plinths provide four height settings, enabling the seating position to be configured for occupant ergonomics, visibility, and vessel layout. Constructed from 5052 marine-grade aluminum, each plinth establishes a rigid, corrosion-resistant foundation. For fixed-elevation installations, the high-density polyethylene FIX plinth delivers a lightweight, rugged base adding a permanent 200 mm (7.87 in) height increase. A-Series plinths can be mounted directly to the deck or to the TRAX base for fore-and-aft adjustment and full removal. The FIX plinth secures directly to the deck.

*Compatibility: A-Series plinths are not compatible with FP4 suspension systems. The FIX plinth is designed specifically for direct-deck mounting with FLEX suspension units.*

Height adjustment

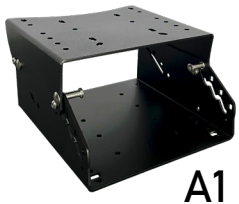
A1


A2


A3


FIX

| FXXCAA03 | FXXCAA04 | FXXCAA05 | FXXBAA00 |
|---|---|---|---|
| 3.2 kg/7 lbs | 4 kg/8.7 lbs | 5.2 kg/11.5 lbs | 2.8 kg/6.2 lbs |

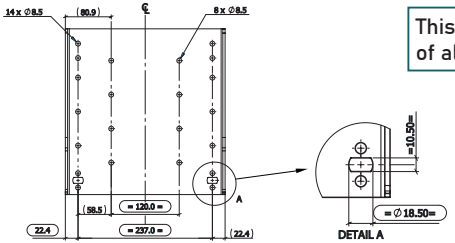


This drawing shows the base dimensions of all A-Series plinths.

## A3 Plinth

**Height steps:** 285 mm ➡ 330 mm ➡ 380 mm ➡ 430 mm

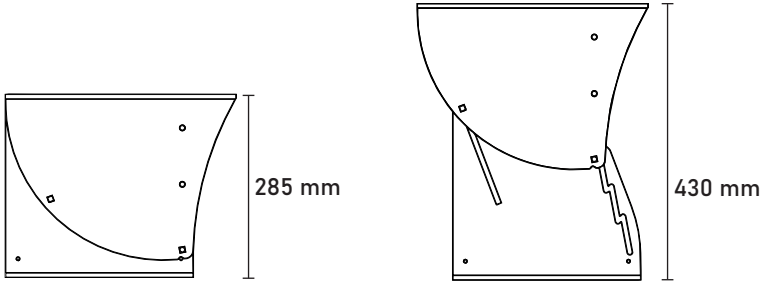


## A2 Plinth

**Height steps:** 200 mm ➡ 228 mm ➡ 266 mm ➡ 300 mm

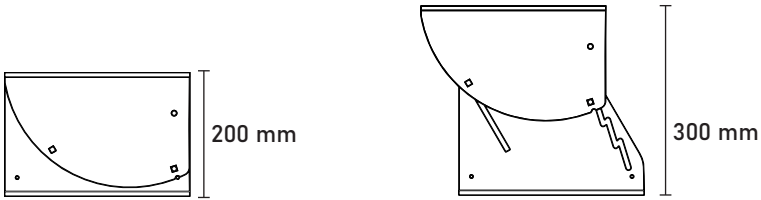


## A1 Plinth

**Height steps:** 120 mm ➡ 136 mm ➡ 153 mm ➡ 170 mm

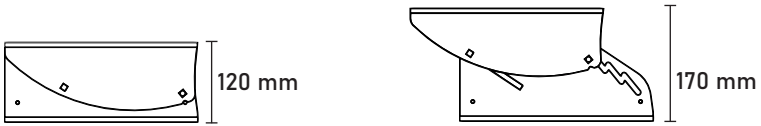


# TRAX

FXXXAA06

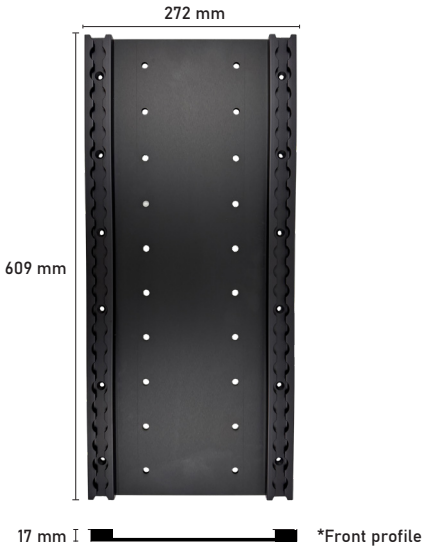


TRAX provides a secure deck-mounted interface for Shark plinths and suspensions equipped with compatible hardware. Its one-piece floor plate supports controlled fore-and-aft seat positioning, while the integrated quick-release interface allows the complete seating system to be removed when additional deck space is required. Made from black powder coated aluminum, TRAX is offered with chamfered or vertical side profiles to accommodate different vessel layouts and installation requirements.

*Installation: The one-piece floor plate simplifies mounting alignment and reduces the number of components required during installation.*

# Accessories



## Lap Belt

The lap belt provides supplemental restraint in demanding conditions. Featuring a quick-release aircraft buckle and 316 stainless steel hardware for marine durability.

*Compatibility: Must be installed per Shark's approved restraint guidelines.*

FXXX0001

Woven fabric + alloy

276 g/8 oz

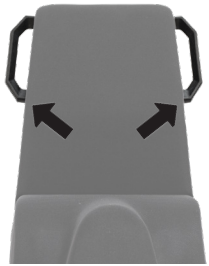

## Side Handles

Shark side handles provide secure, purpose-positioned grip points for occupant bracing and control in demanding marine conditions. Standard on ULTRA and available for compatible LUXE and EPIC configurations. Their lightweight injection molded construction delivers support without obstructing movement or compromising the seat's ergonomic geometry.

FXXX2000

Injection molded plastic

140 g/5 oz



## Adjustable HD Armrests

*Sold in pairs*

Shark's adjustable armrests strengthen upper-body support and occupant positioning during extended marine operation. Standard on LUXE and available for EPIC with the required support kit, their fold-up design maintains clear entry and exit access, while angular adjustment enables the support position to be configured for the operator and application.

FXXX0011

Alloy + plastic

2.5 kg/5.5 lbs



## Foot pegs

*Sold in pairs*

Shark foot pegs provide high grip contact points for occupant posture and bracing in demanding marine conditions. Constructed from corrosion-resistant 316 stainless steel, their folding design flips up and down to save space, delivering durable support while preserving deck clearance.

F0050900

316 stainless

500 g/12 oz

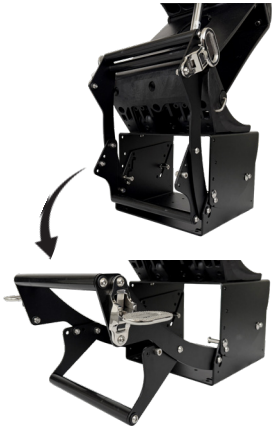

## Fold-away Footrest

The Shark fold-away footrest pairs a forward bar with side pegs to offer multiple bracing positions for rider stability. Constructed from 5052 alloy, it deploys when needed and folds compactly against the plinth to preserve deck space.

*Compatibility: Fits compatible Shark A-Series plinths.*

FXXXAA02

316 stainless

3.1 kg/6.8 lbs



## 4-Point Harness

*Only available with LUXE*

Engineered for LUXE, the Shark 4-point harness provides upper and lower-body restraint for high speed and rough-water operations. Its four-point architecture limits rider movement to maintain posture during demanding commercial, rescue, and government use.

FXXX0005

Woven fabric + Alloy

2 kg/4.4 lbs



## Fore-handle

The Shark fore-handle provides a solid forward grip point for occupant bracing and control during offshore operations. Compatible with ULTRA, EPIC, and LUXE jockey seats, its 5052 alloy construction and low-profile under seat mounting deliver durable support while preserving occupant clearance and unrestricted seat access.

FXXXAA10

Alloy

2.4 kg/5.3 lbs



## Swivel

The Shark seat swivel provides 360-degree rotation with positive locking positions at 90-degree stops, enabling precise seat positioning for helm access, visibility, and changing operational needs. Constructed from marine-grade alloy, the low profile mechanism fits beneath ULTRA, EPIC, LUXE, and EVO seats equipped with FLEX and FLEX-HD suspensions while adding only 35mm (1.38 in) to the overall seat height.

FXXXBA00

Alloy

1.5 kg/3.3 lbs

# Covers

## Engineered Marine Upholstery

Shark seat covers: Combine commercial-grade marine vinyl with a precision-fitted construction engineered for demanding marine environments. The durable exterior resists moisture, UV exposure, abrasion, and routine wear while protecting the seat surface beneath it. Available in black or grey, each cover maintains a clean, tailored profile and can be removed for inspection, cleaning, or replacement.

*Custom upholstery options are available.*







| | |
|---|---|
| Grey with logo: FXXXAD08 | Black with logo: FXXXAD06 |
| Grey without logo: FXXXAD09 | Black without logo: FXXXAD07 |

# Stowage Covers

NEW! Designed as an effortless, off-use protective drape for seats when the vessel is not in operation, Shark Premium Stowage Covers guard against harsh marine elements to extend seat life. Constructed from heavy-duty, UV-stable, and water-resistant 600D solution-dyed polyester, this durable cover features a secure drawstring closure and resists weathering while remaining easy to clean. Available in black, the stowage cover is offered in two dedicated sizes engineered to fit EPIC and LUXE seat profiles.

*(Note: Designed for berthed or stored vessels; not intended for trailering).*




***EPIC***: FXXXAE01




***LUXE***: FXXXAE02

# Testimonials



"Went out in 1m swells, which for the lake is rough. Brilliant is all I can say. Forty knots head-on and we were all comfortable. Even full speed at 48 knots with no problems. Usually we are dong 30 knots and really hurting."

Alan Turia
Turangi Coast Guard, NZ



"As manufacturer of high speed indestructible HDPE workboats we rely on a reliable, safe and economical product like Shark ULTRA suspension seats to keep our customers safe and healthy. When working in a rough environment at high speeds a comfortable and practical jockey seat is a must have for any high speed boat operator. We have been using Shark Ultra seats for all our open workboats for the last 3 years and we did not have any problems or service issues at all. It is a good and practical seat for a reasonable price!"

Bruno Tideman
Tideman Boats B.V

"When you're pushing a tactical boat through heavy swell, crew fatigue is the real enemy. We chose Shark Seating for our naval Seaboat contract because their technology matches the durability of our HDPE hulls while keeping our operators safe. It's straight forward, reliable gear that simply works, allowing those operating our vessels to achieve their mission, avoid injury and recover faster."

Sentinel Boats
Tasmania AU





"The jockey seat has been brilliant... would never have thought of getting such a seat before, but now I would not want to give it up even if i was in perfect health .. it is just much safer and more comfortable than standing or sitting in anything else."

Michael Halsey
Sunshine Coast, AU

# Setting the Standard. Unrivaled Performance.

# FAQ's

**How much maintenance do Shark suspension systems require?**
Shark suspensions combine corrosion-resistant materials, minimal moving components, and simplified mechanical architecture to reduce routine service demands. Following saltwater exposure, rinse the system with fresh water and perform periodic inspections in accordance with Shark's maintenance guidance. Routine air-pressure monitoring, shock re-gassing, and pivot-joint greasing are not required.

**Does the suspension require manual adjustment between occupants?**
No. Shark's proprietary stainless steel shock absorber provides a progressive, self-adjusting response without routine manual tuning. This allows the suspension to respond consistently across its intended operating range while reducing the risk of incorrect user adjustment.

**How are Shark suspensions engineered for saltwater environments?**
Shark suspensions combine proprietary FLEXANITE® composite construction with marine-grade stainless steel components and fasteners. FLEXANITE® is UV and corrosion resistant and has no painted exterior finish that can chip, peel, or corrode. Routine fresh-water rinsing and periodic inspection help preserve the system's condition throughout long-term marine service.

**Can Shark suspensions be integrated with third-party seats?**
Select Shark suspension platforms support compatible third-party seating through approved mounting interfaces and reinforced HD models. Compatibility depends on the seat dimensions, mounting pattern, center of mass, payload, and intended vessel application. All third-party integrations should be reviewed and approved before installation.

**How does Shark's lightweight construction benefit the vessel?**
Shark's composite architecture delivers shock-mitigation performance with substantially less installed mass than many conventional metal suspension systems. The FLEX suspension weighs approximately 9 kg (19.8 lbs), while FLEXpod weighs approximately 3.3 kg (7.3 lbs). Reducing seat-system weight helps preserve vessel payload, deck capacity, and overall performance.

**What is the engineering benefit of 225 mm of travel?**
The FLEX suspension provides 225 mm (9 in) of vertical travel, creating an extended deceleration path between the vessel deck and the occupant. The available stroke allows impact energy to be managed over a greater distance, reducing peak acceleration transferred through the seat and preserving suspension movement during repeated wave strikes.

**How has FLEX performance been validated?**
FLEX-equipped seating has completed one million 10G impact cycles at 200 mm (7.87 in) travel, 100-millisecond duration, and a 100 kg (220.5 lb) payload. Supporting technical documentation should be referenced according to the specific product configuration and customer requirement.

**How does Shark address pinch-point hazards?**
The FLEXANITE® composite architecture is engineered without hazardous pinch points or exposed sharp edges throughout the suspension's range of movement. Its smooth geometry reduces contact hazards for occupants and nearby personnel, particularly in confined cabins and high-traffic vessel layouts.

shark
SEATING

www.sharkseating.com

ED2027A